PRO SERIES

TECHNICAL DATA SHEET

SAA 140107EA CE CB LM80

SPECIFICATIONS

Pro-Series Commercial Downlight range is designed to replace traditional CFL and CDM downlights and brings the benefits of low heat, low power consumption and high CRI.

High performance SMD LED Chip set technology is used to produce superior lumen output, available in 120mm, 160mm and 200mm cut-out to suit a wide range of applications. These downlights have attractive texture and appearance, ideal for any commercial lighting solutions, are environmentally friendly and fully recyclable.

Features

- Input voltage: 200~240V AC 50~60Hz
- Dimmable driver with SMD LED chips
- Life time: 40,000hrs
- CRI>82 gives real color of objects
- 4", 6", 8" sizes to meet your needs
- 3-year replacement warranty
- Easy to install and perfectly replacing the traditional lighting

PRO SERIES

PRO-SERIES COMMERICAL RECESSED DOWNLIGHT SERIES

15W 4000K SMD 5630 – Code: PRO-DL15NWSMD-A IP44

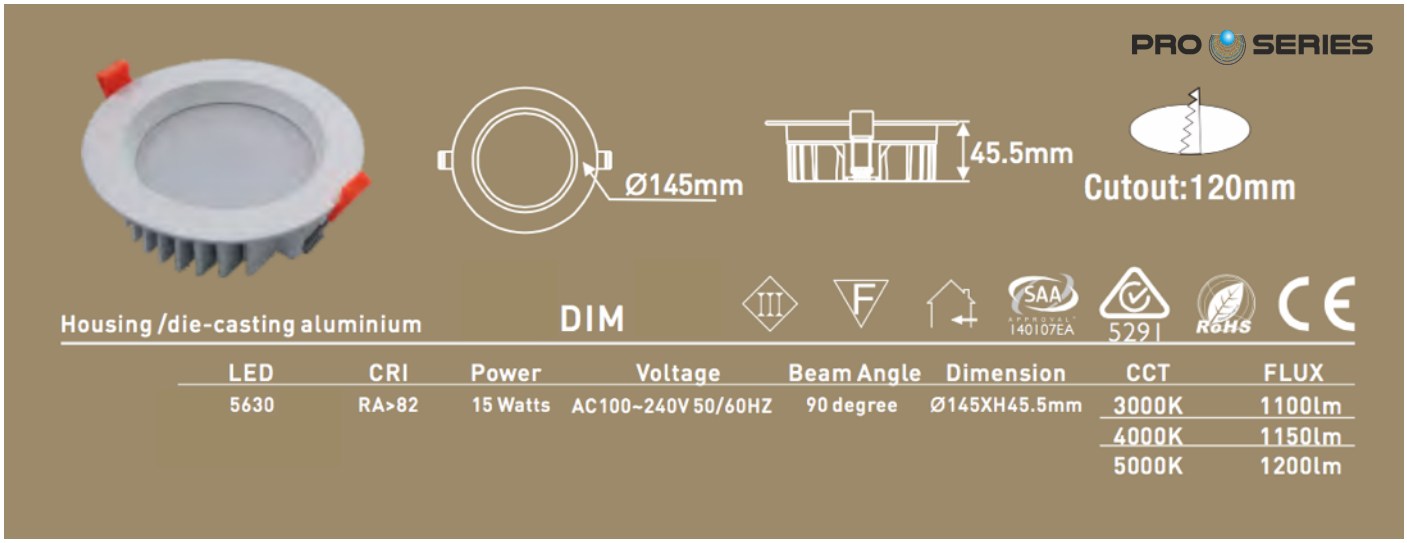

LED	CRI	Power	Voltage	Beam Angle	Dimension	CCT	FLUX
5630	RA>82	15 Watts	AC100~240V 50/60HZ	90 degree	Ø145XH45.5mm	3000K	1100lm
						4000K	1150lm
						5000K	1200lm

20W 4000K SMD 5630 – Code: PRO-DL20NWSMD-A IP44

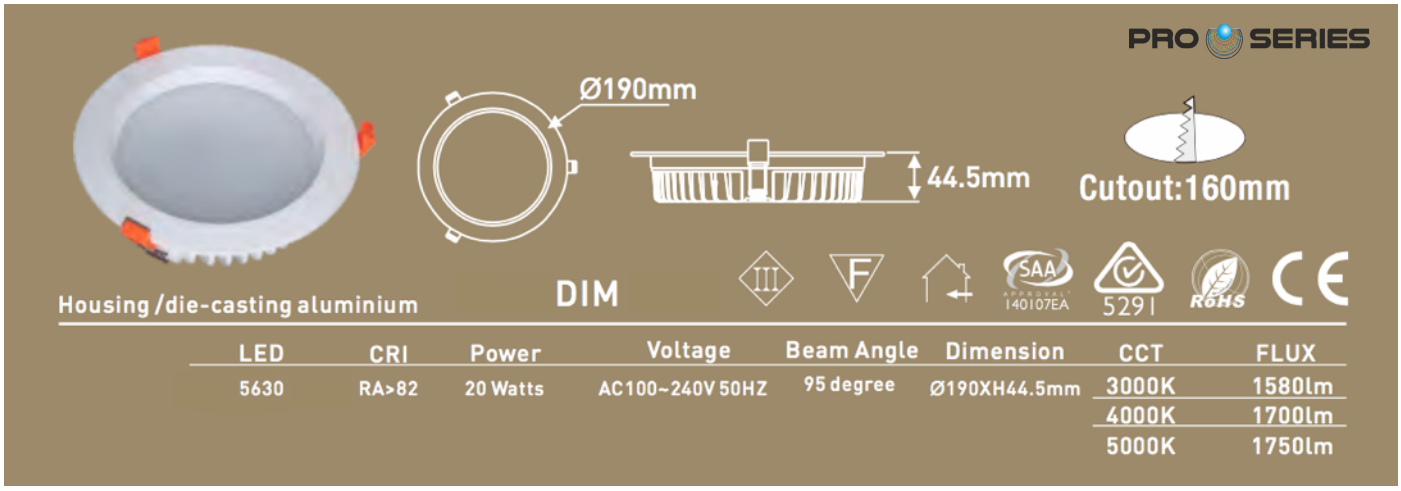

LED	CRI	Power	Voltage	Beam Angle	Dimension	CCT	FLUX
5630	RA>82	20 Watts	AC100~240V 50HZ	95 degree	Ø190XH44.5mm	3000K	1580lm
						4000K	1700lm
						5000K	1750lm

28W 4000K SMD 5630 – Code: PRO-DL28NWSMD-A IP44

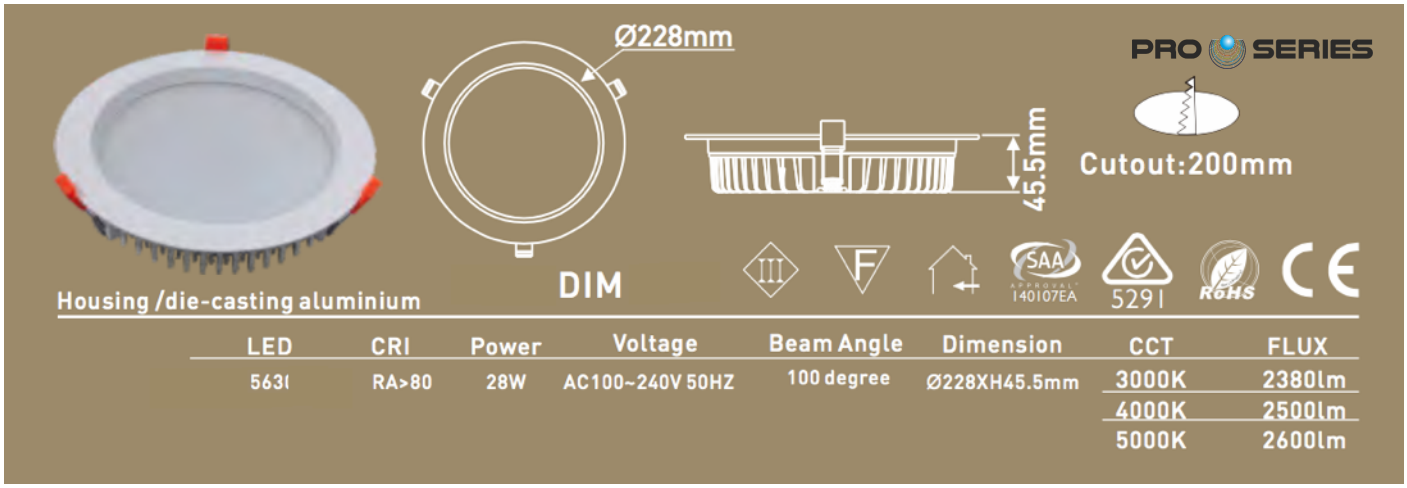

LED	CRI	Power	Voltage	Beam Angle	Dimension	CCT	FLUX
5631	RA>80	28W	AC100~240V 50HZ	100 degree	Ø228XH45.5mm	3000K	2380lm
						4000K	2500lm
						5000K	2600lm